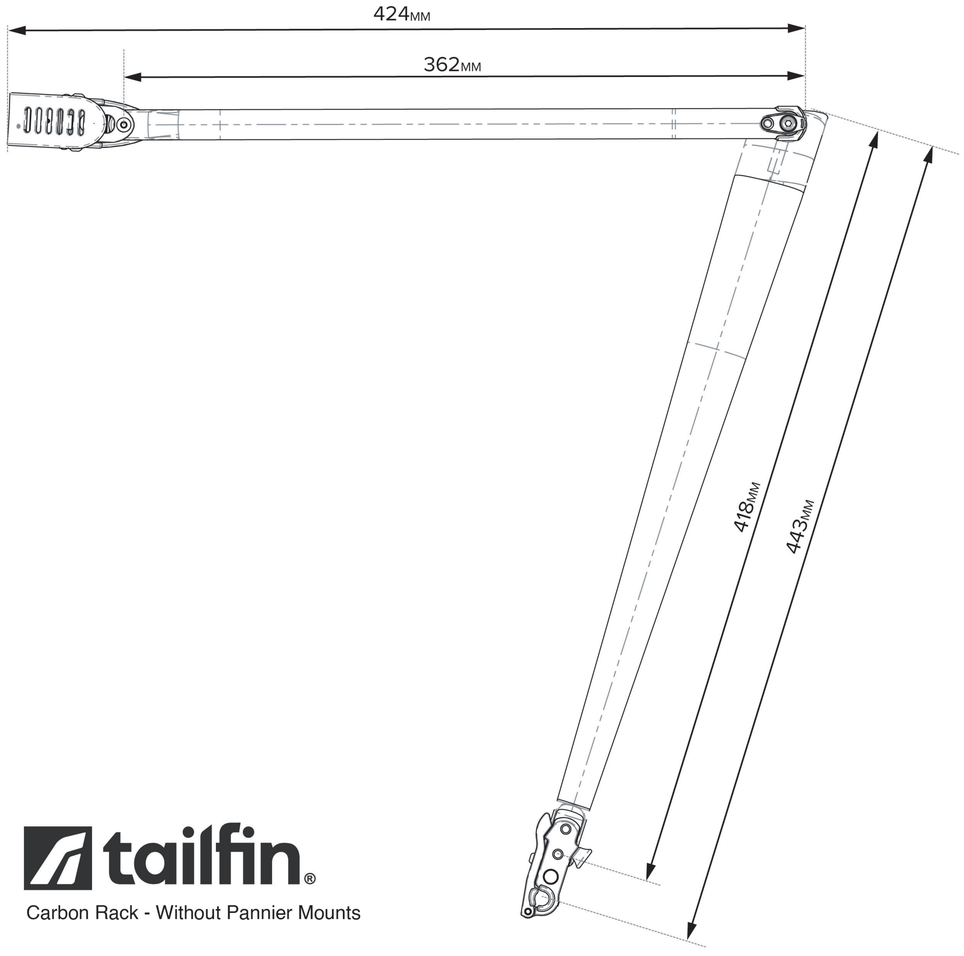

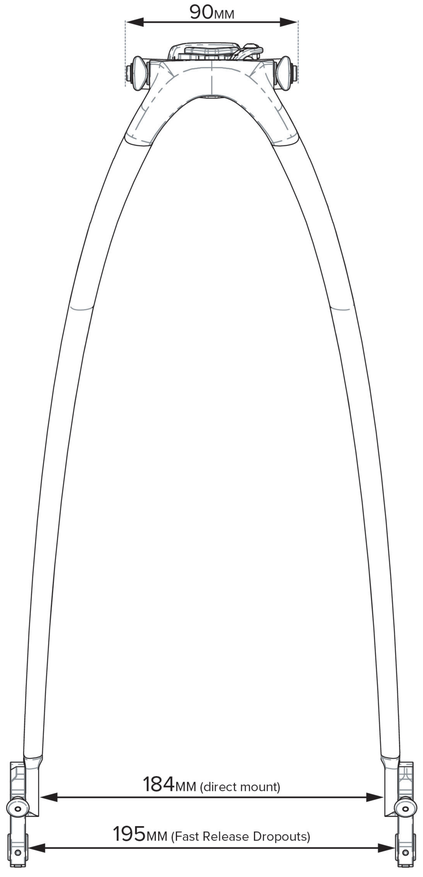

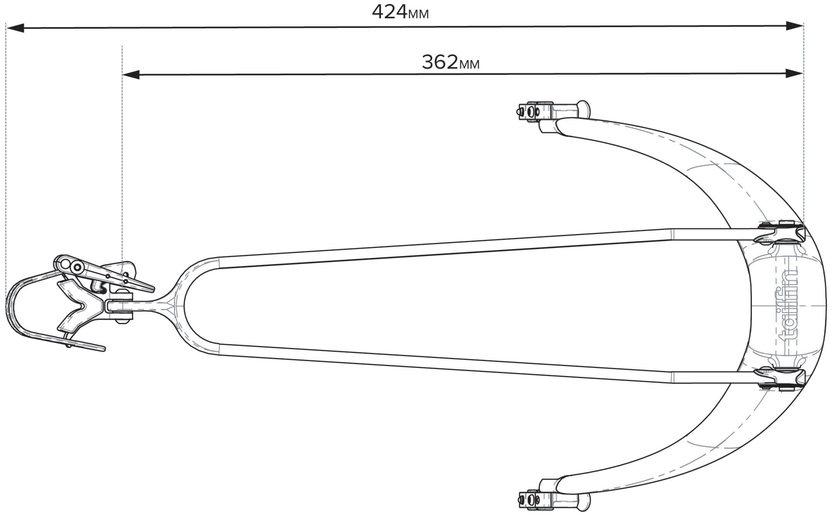

tailfin®

Carbon Rack - Without Pannier Mounts

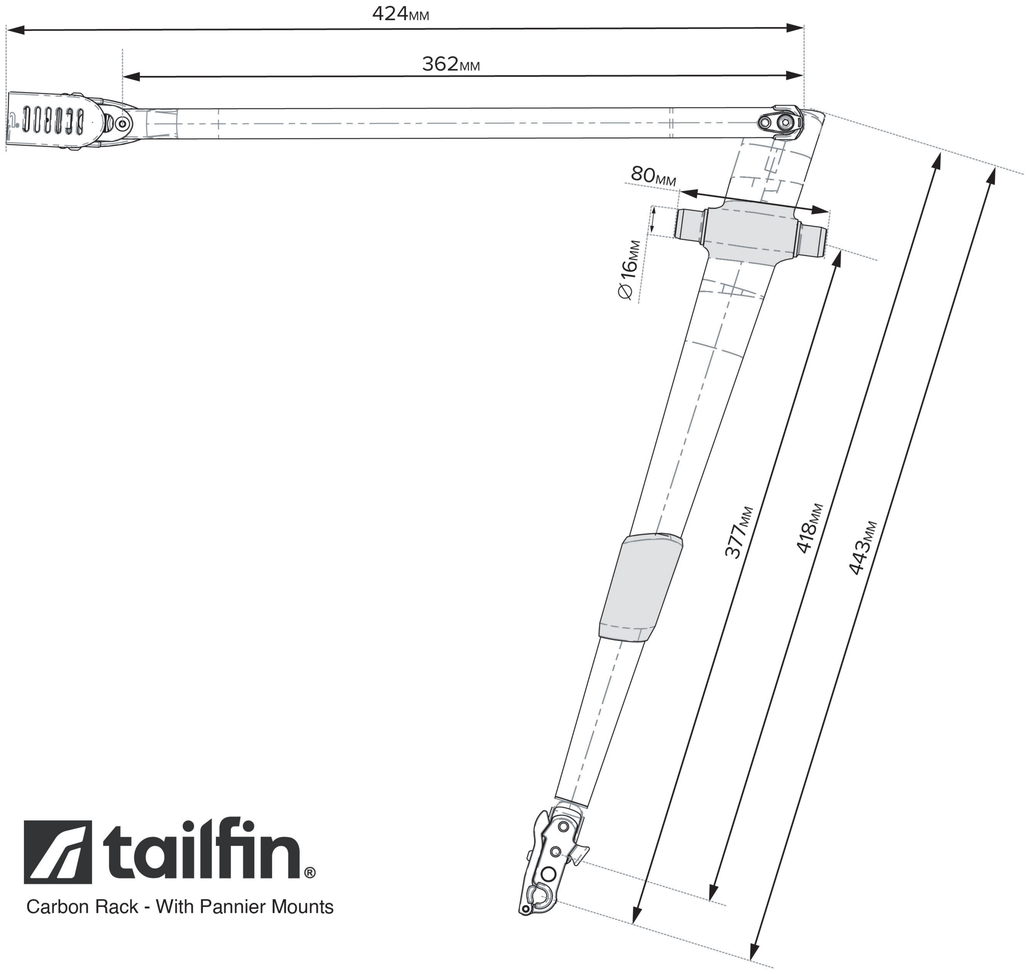

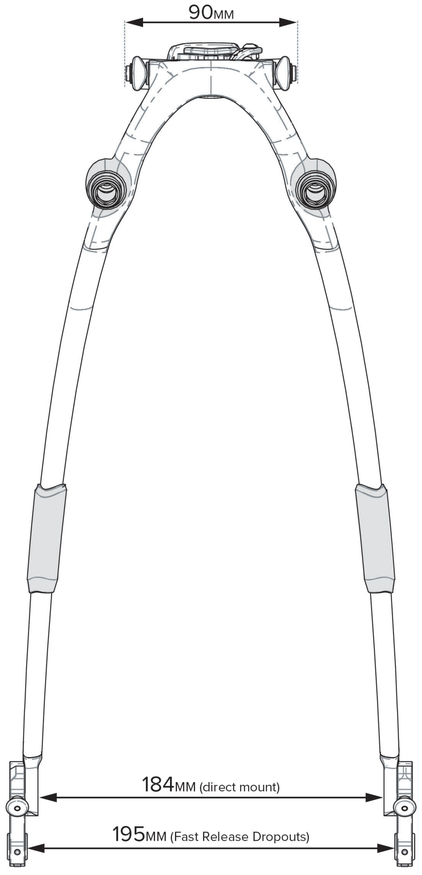

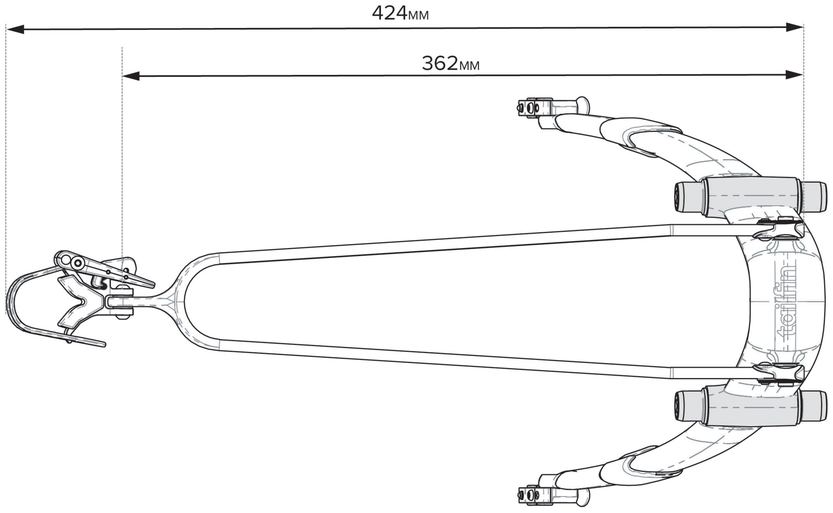

tailfin®

Carbon Rack - With Pannier Mounts